Lens Specification	
Focal length	105.0mm (at λ=250nm)
Back focal length	106.98 mm
Mechanical back	13.53 mm
Aperture ratio	F/4.0 ~ F/22
Image size	⌀18.0mm (max ⌀43.266)
Magnification	
Distortion	-0.11 %
Angle of view at INF.	
Vertical	
Horizontal	
Diagonal	9.8 °
Resolution	
Center	
Corner	
Pupil positions	
Entrance pupil	15.71 mm (Front lens)
Exit pupil	-114.49 mm(Image plane)
Principal points	
Object space	24.42 mm (Front lens)
Image space	-105.0 mm (Image plane)
Coating	(λ=250nm)
All surfaces are antireflection coated. MgF2 single coated.	

Note:
1. Mini. Working Dist.
   416.5mm (at λ=250nm)
   527.5mm (at λ=300nm)
   615.8mm (at λ=350nm)
   673.1mm (at λ=390nm)
2. Mount
   C-Mount & T-Mount

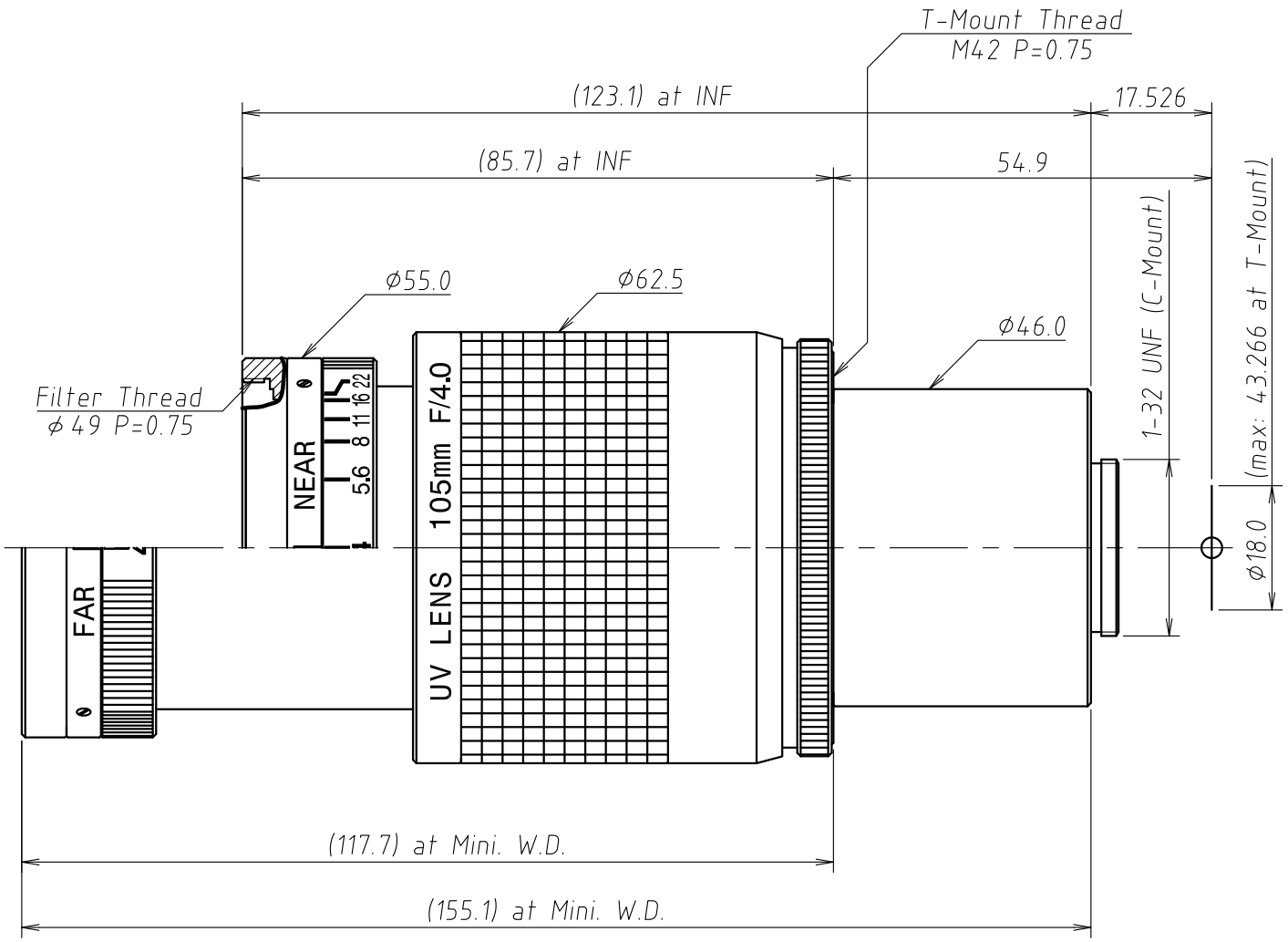

EHD imaging GmbH
Zum Rennplatz 15
49401 Damme/Germany
Phone: +49-5491-2090
Fax: +49-5491-2098
web: www.ehd.de
e-mail: info@ehdimaging.de

4		TITLE 105mm F/4 UV LENS		DRAWN M.M.
3				
2		P/NO. UV1054B		CHECKED H.K.
1				
	07/28/2014	Mfg.NO. VC780A-TY01	UOI UV1054B	SHEET 1 OF 1	REV A